ISSN 2395-1621

Experimental investigation and analysis on composite brake lining with for lifting application

#1Prajakta Kachare, #2Dr.M.V.Nagarhalli

1Prajaktakachare@gmail.com

#12Mechanical RMD Sinhgad School of Engineering, Pune, India

ABSTRACT

In this work, a non-asbestos friction material was developed using an agro-waste material base which is palm kernel shell (PKS), along with other constituents. This was with a view to exploiting the characteristics of the PKS, which are largely deposited as waste from palm oil production, in replacing asbestos which has been found to be carcinogenic. Five sets of brake pads with identical ingredients which using PKS as a base materials were produced following the standard procedure employed by the manufacturers. PKS was better than the asbestos-based brake-pad in terms of lower specific gravity; lower percentage swelling, when wet; higher heat resistance, heat dissipation and coefficient of friction. Therefore, PKS is suitable for use as a material for friction material in automotive brake pad. Further study would enhance the value of PKS as an alternative material replacing the asbestos as a friction materials.

Keywords— Brake linings, brake power absorption, graphite inserts, strength analysis, wear rate

ARTICLE INFO

Article History

Received :18th November 2015

Received in revised form :

19th November 2015

Accepted : 21st November , 2015

Published online :

22nd November 2015

I. INTRODUCTION

The base material for formulation is palm kernel shell which is an agro – waste. Apart from PKS, the other ingredients are also used. Non-asbestos organic (NAO) based friction materials are essentially multi ingredient systems (containing more than 10 ingredients, in general) in order to achieve the desired amalgam of performance properties. Though the list of ingredients used for formulation of such composites exceeds the number 700, these are classified into four major categories viz. Binder, fibers, friction modifiers and fillers based on the major function they perform apart from controlling friction and wear performance. Binder is the heart of a system which binds the ingredients firmly so that they can perform the desired function in the friction materials. Fibers in combination are added mainly for strength while friction modifiers are used to manipulate the desired range of friction. Fillers are of two types viz. functional fillers (to improve particular characteristic feature of composites such as resistance to fade, etc.) and space/inert fillers (mainly to cut the cost). Phenolic resins (modified and unmodified) are invariably used as binder in friction materials due to low cost along with a good combination of mechanical properties such as high hardness, compressive strength, moderate thermal resistance, creep resistance and very good wetting capability with most of the ingredients. However, these resins are sensitive to heat and humidity and in situ polymerization starts slowly even at ambient temperature leading to its poor shelf life.

II. LITERATURE REVIEW

DareddyRamana Reddy, BanothBaluNaik[1] present paper on Ingredients Composition Formulations and development of a new friction composite for friction lining applications using MINITAB16. In this work a non-asbestos bio-friction material is enlighten which is developed using an satisfactorily in terms of amount of wear and stopping time.Agro-waste

material palm kernel shell (PKS) along with other Ingredients. Among the agro-waste shells investigated the PKS exhibited more favorable properties. Taguchi optimization technique is used to achieve optimal

formulation of the friction material. The developed friction material is used to produce automobile disk brake pads. The developed brake pads were tested for functional performance on a specially designed experimental test rig. Physical properties of this new material along with wear properties have been determined and reported in this paper. When compared with premium asbestos based commercial brake pad PKS pads were found to have performed

O. A. Ibhadode and I. M. Dagwa [2] presents paper on Development of Asbestos-Free Friction Lining Material from Palm Kernel Shell Friction materials are applicable for braking and transmission in various machines and equipment. Their composition keeps changing to keep pace with technological development and environmental/legal requirements. For more than 80 years asbestos has been used as a friction material because of its good physical and chemical properties. However, due to the health hazard associated with its handling, it has lost favour and several alternative materials are being increasingly used. Thus, in this work, a non – asbestos friction material was developed using an agro-waste material base – palm kernel shell (PKS)- along with other constituents. Among the agro-waste shells investigated the PKS exhibited more favourable properties. Taguchi optimization technique was used to achieve optimal friction material formulation and manufacturing parameters. The derived friction material was used to produce automobile disk brake pads. The laboratory brake pads were tested for wear and effectiveness on a car. When compared with a premium asbestos-based commercial brake pad they were found to have performed satisfactorily. However, more pad wear was observed on the PKS pad at high vehicular speeds beyond 80km/hour. The results suggest that palm kernel shell could be a possible replacement for asbestos in friction lining materials.

R. B. Mathur, P. Thiyagarajan and T. L. Dham [4] presented paper on Controlling the Hardness and TribologicalBehaviour of Non-asbestos Brake Lining Materials for Automobiles. There have been significant changes in the formulations of friction materials for the brake lining systems of automobiles. The shift is in the direction of better heat resistance, higher coefficient of friction, and extended durability. Replacement of asbestos are suggested as carbon, Kevlar, glass fibre, steel wool, wollastonite, graphite fibres and a number of other mineral fibre types. In general, the development of friction material with these fibres has quite adequately met the requirements. However, hardness of these many non-asbestos ingredients has been the negative points

Sachinkumarpatel [5] presented paper on Experimental Study of Brake Lining Materials with Different Manufacturing Parameters A brake lining composition was investigated experimentally to investigate the effects of the manufacturing parameters on the tribological properties and to obtain optimal manufacturing parameters for improved tribologicalbehaviour. Brake linings are important parts in braking systems for all types of vehicles. They convert the kinetic energy of the car to thermal energy by friction in the contact zone.

.F. N. Onyeneke1, J. U. Anaele and C. C. Ugwuegbu [6]:Production of Motor Vehicle Brake Pad Using Local Materials (Perriwinkle and Coconut Shell) this paper review on the production and testing of motor vehicle brake pad using locally available raw materials is presented. The disc brake friction lining with the geometrical specifications of Audi 90 model was produced using palm kernel and coconut shell powder as base materials, araldite and epoxy resin as binder materials and carbon as fibre reinforcement. Aluminum, copper, zinc and cashew nut shell were used as abrasives and rubber dusts from shoe as filler. The commercial asbestos brake pad produced by Ibeto group of Companies served as control. Two groups of samples of 25 each and sub group of five samples each were produced. The two major groups were made to have different percentage composition of carbon, palm kernel shell, coconut shell, araldite and epoxy resin. The five sub group samples were produced from different grit/particle sizes. Test results revealed that second major group composition with grit/particle size of 0.25 and 0.35 gave the best result in the test instruments used and in proof test on Audi 90 model. Further test on the second major group composition gave static and dynamic friction coefficient of (0.4-0.65) and (0.35-0.55) respectively as compared to static and dynamic coefficient of 0.5 -0.75 and 0.45-0.65 respectively of the reference commercial asbestos lining produced by Ibeto. The scratch hardness, bonding strength to the back plate and wear rate of the specimen were in the range (80-85), (25-27) kg/cm2, (0.03-0.06) mm/min. respectively and for asbestos brake pad wear rate range from 0.04-0.08mm/min.

M P Natarajan, B Rajmohan and S Devarajulu [7] presented paper On Effect Of Ingredients On Mechanical And Tribological Characteristics Of Different Brake Liner Materials : It review on asbestos possesses properties that are ideally suitable for use as a friction material in automotive and a number of other applications. Animal and human studies carried out since the early 1900s have established that asbestos is carcinogenic and that exposure to especially asbestos dust causes a large number of diseases. The search is, therefore, still on to find suitable substitutes for asbestos. A brake lining containing 14 ingredients was investigated to study the effect of ingredients on various aspects of friction properties. The composite was developed for a nonasbestos organic based friction material for an automotive brake system and contained typical ingredients for commercial brake friction materials.

A. Methodology

1.Design of profile of PKS brake liner.
2.CAE simulation of liner material.
3.Actual testing of new material on test rig.
4.Comparative study of software analysis and actual testing result for conclusion.

1.Design of profile of PKS brake liner

- As actual test rig
- Drum brake diameter = 200mm
- Dimensions are chord length = 175mm
- Width= 40mm
- Thickness = 5mm

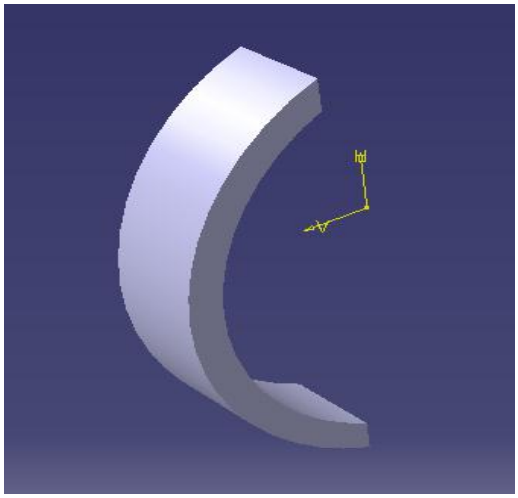

Fig.1 Image of profile of brake liner

B.Threotical design

Sample Calculations:- (At 0.6 Kg Load)
1)Average Speed :- 850rpm
2) Input Torque : Tip = μ N R= 225Nmm
3) Output Torque:-T_{dp} = Weight in pan x Radius of Dynobrake Pulley= (0.6 x 9.81) x 37.5=202.725 N.mm= 203 Nmm
4) Input Power :Pi/P

$$P_{i/P} = \frac{2\Pi N T_{i/P}}{60}$$

= 2 * 3.14* 850* 0.225/ 60 = 20.27Watt
5) Output Power : Po/t

$$Po/p = \frac{2 \Pi N T_{i/p}}{60}$$

=2 * 3.14* 850* 0.205/ 60 = 18.60 Watt
6) Brake Power Absorbed In Friction (Bpaf):-

=Input Power – Output Power = 20.27 – 18.60 = 1.67 Watt

Serial No	Material	Load(Kg)	Input power	Output Power	BPAF
1	Asbestos	0.6	19.63	18.50	1.09
2	PKS	0.6	20.43	18.50	1.98

From theoretical table it is observed that as coeffiecient of friction is more wear rate is also more hence to reduce wear rate there is need to insert graphite in it.

III. CONCLUSION

This work presents the manufacturing of an asbestos-free friction lining material in which an Agro-waste (palm kernel shell) was used as the base material. Palm kernel shells can be used as partial replacement for asbestos in friction material formulation which will be helpful in reducing or controllingthe environmental pollution to some extent. A friction lining material based on PKS as a substitute for Asbestos has been developed. The mechanical and physical properties compare well with Commercial asbestos-based friction lining material. PKS has a coefficient of friction (0.41), which falls within that expected for friction materials. However, further refinement of the PKS lining formulation is recommended in order to have a better performance in brake test rig. To give final conclusion CAE simulation and experimental testing isyet to be done.

ACKNOWLEDGMENT

Words fall short to express my deep sense of gratitude towards them all, who have imparted their valuable time, energy and intellect towards the completion of my project take this opportunity to express my gratitude to my project guide and HOD of department Dr.M. V. Nagarhalli and for constant encouragement and guidance.

REFRENCES

[1] 1. A. M. Zahurudin, R.J. Talib, ‘’Taguchi method for optimizing the manufacturing parameters of friction materials’’, IJMME, vol no.7, (2012) No.1, 83-88
[2] 2. R.B.Mathur, P. Thiyagarajan, “Controlling the hardness and tribologicalbehaviours of non-asbestos brake lining material for automobile’’, carbon science, vol 5, No.1 march 2005 ,pp 6-11
[3] 3. Sachin Kumar patel, ‘’Experimental study of brake lining material:with different manufacturing parameters’’, IJETT, vol 7, No 4, jan 2014
[4] 4. M. P. Natarajn, B. Rajmohan, ‘’Effect of ingredients on mechanicl and tribologicalcharecteristics of different brake liner materials’’ IJMERR, Issn No: 2278-0149, vol 1, No 2, July 2012
[5] 5. F. N. Onyene, J.U. anaele, “Production of motor vehicle brake pad using local materials’’,IJES, vol 3, Issue 9, page no 17-24, Issn No:2319-1813.
[6] 6. R.S.Fono, O.A.Koya “Evaluation of material characteristics of friction linings from agricultural waste.” IJART, vol 2, Issue 11, Nov 2013, Issn No: 2278-7763
[7] 7. Z.U. Elakhame, O.A. Alhassan, “Development and production of brake pads from Palm Kernell Shell composite.” IJSER, Vol no 5, Issue 10, Oct 2014, Issn No: 2229-5518
[8] 8. Brijendra Gupta, Ashish Modi, ‘’Review of automotive brake friction materials.’’ IJAER, Vol 2, Issue 2,Feb 2015, Issn no: 2348-6406
[9] 9. Richard A. Lemen, ‘’Asbestos in brake: Exposure and risk of disease.’’ AJIM , Issn No: 229-237(2004)

